Noncommutative dehomogenisation

Sheffield, March 2003

Based on work with
Ann Kelly and Laurent Rigal

Papers available at:

http://www.maths.ed.ac.uk/~tom/preprints.html

Geometry

$\mathbb{A}^2(k)$

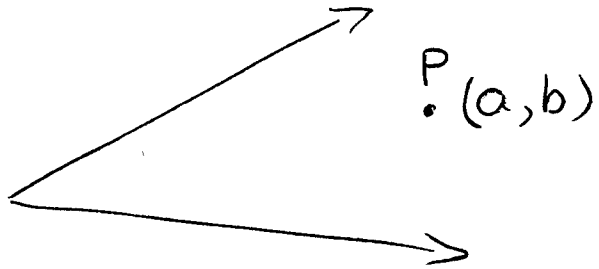

$V = \{(a,b) \mid a^3 = b^2\}$

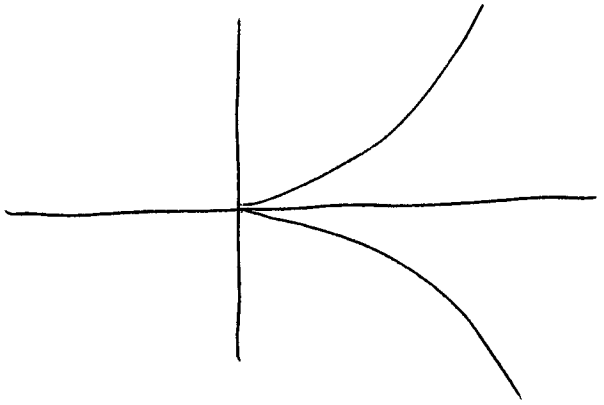

Algebra

$k[x,y]$

$I = \langle x-a, y-b \rangle$

$g(V) = \langle x^3 - y^2 \rangle$

$O(V) = k[x,y]/g(V)$

Hilbert's Nullstellensatz

k algebraically closed

- The maximal ideals of $k[x,y]$ are of the form $\langle x-a, y-b \rangle$ for $a, b \in k$.

- If $f \in k[x,y]$ is irreducible then the points (a,b) on the curve $f(a,b) = 0$ are in 1-1 correspondence with the maximal ideals of the factor ring

$$k[x,y] / \langle f \rangle$$

Projective Geometry $\mathbb{P}^2(k)$

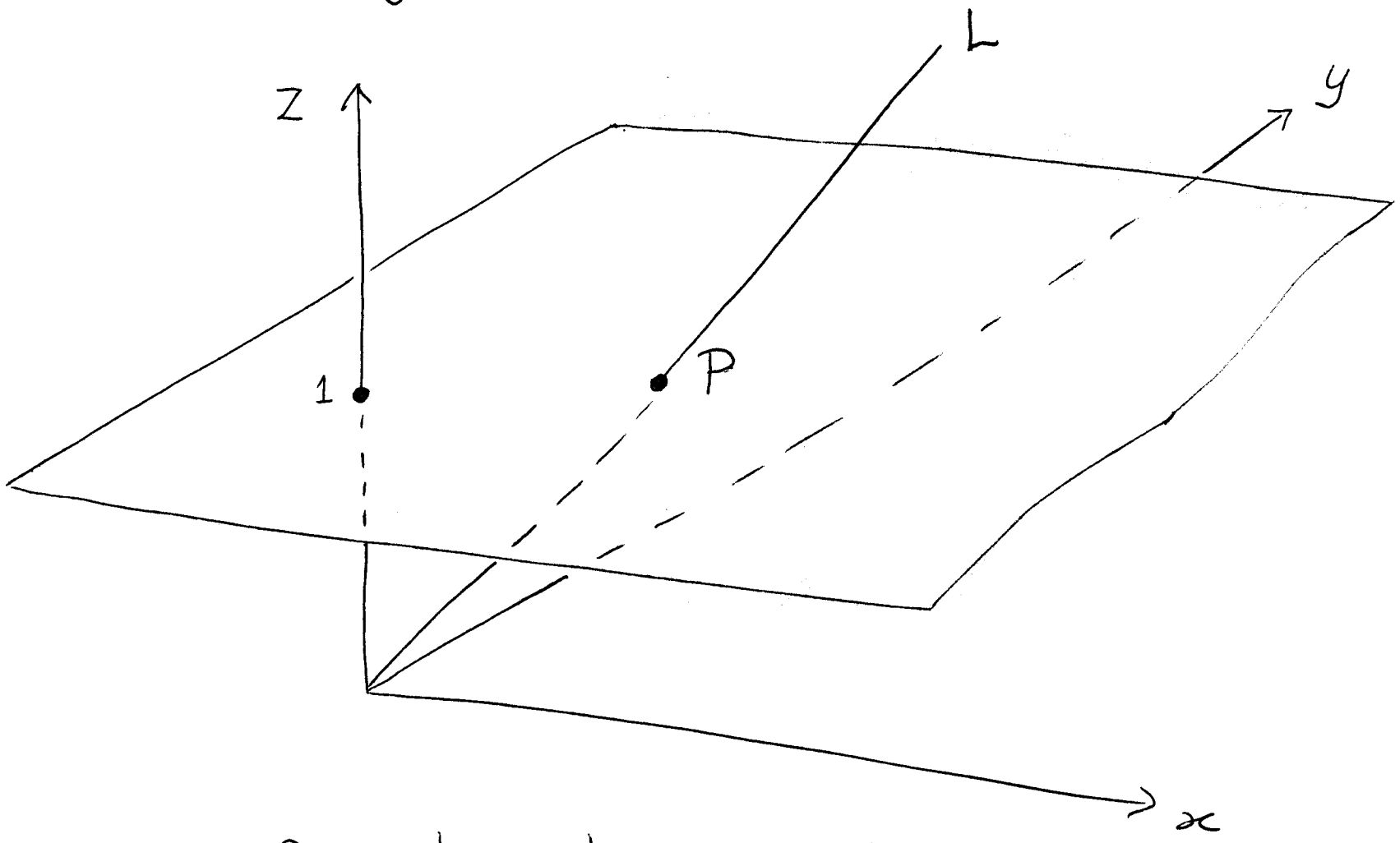

- The points P in the plane $z = 1$ are represented by lines L through O & P.
- The lines in the x, y plane represent <u>points at infinity</u>

- The lines through (a, b, c) and O & through (a', b', c') and O are the same line iff $\exists 0 \neq \lambda \in k$ with $(a', b', c') = \lambda(a, b, c)$.

- Line specified by $[a : b : c]$, a, b, c not all zero, up to above equivalence

- recover affine geometry by setting $c = 1$.

- In $k[x, y, z]$ the <u>irrelevant ideal</u> $\langle x, y, z \rangle$ does not determine a point in $\mathbb{P}^2(k)$
- $[a : b : c] \in \mathbb{P}^2(k) \longleftrightarrow I := \langle bx - ay, cx - az, cy - bz \rangle$
- $c = 1$ $[a : b : 1] \in \mathbb{A}^2(k)$ $\quad \overline{I} = \langle bx - ay, x - a, y - b \rangle$
- $k[x, y, z] / \langle z - 1 \rangle \cong k[x, y]$

This is <u>dehomogenisation</u> at z

Quantum plane

- $0 \neq q \in k$
- $k_q[x,y] \qquad xy = qyx$
- dehomogenise by setting $x = 1$ collapses too much if $q \neq 1$.
- when $x = 1$, $\bar{y} = q\bar{y}$

so $\bar{y}(1-q) = 0 \quad \& \quad \bar{y} = 0$

so $k_q[x,y]/_{\langle x-1 \rangle} \cong k$

- R is an <u>$\mathbb{N}$-graded algebra</u> if

$$R = R_0 \oplus R_1 \oplus R_2 \oplus \cdots$$

with $R_i R_j \subseteq R_{i+j}$

- If R is commutative, and $z \in R_1$ then the <u>dehomogenisation of R at z</u> is

$$R/\langle z-1 \rangle$$

- <u>Alternatively</u>, $S = R[z^{-1}]$ is $\mathbb{Z}$-graded

$$S = \cdots \oplus S_{-1} \oplus S_0 \oplus S_1 \oplus S_2 \oplus \cdots$$

and for R commutative $\dfrac{R}{\langle z-1 \rangle} \cong S_0$

Noncommutative Dehomogenisation

- $R = R_0 \oplus R_1 \oplus R_2 \oplus \cdots$, $\mathbb{N}$-graded
- $x \in R_1$, nzd & <u>normal</u> (ie, $xR = Rx$)
- $R[x^{-1}]$ is $\mathbb{Z}$-graded ($S = R[x^{-1}] = \cdots \oplus S_{-1} \oplus S_0 \oplus S_1 \oplus \cdots$)
- $\mathrm{Dhom}(R, x) := S_0$ ($= R_0 + R_1 x^{-1} + R_2 x^{-2} + \cdots$)
- For $r \in R$ write $xr = \sigma(r)x$, $\sigma \in \mathrm{Aut}(R)$

Then

$$R[x^{-1}] \cong \mathrm{Dhom}(R, x)[z, z^{-1}; \sigma]$$

a skew Laurent extension.

eg $R = k_q[x,y]$ $xy = qyx$ $yx^{-1} = qx^{-1}y$.

$R[x^{-1}] = k_q[x^{\pm 1}\ y]$ $q(yx^{-1})^2$

Degree zero part: $1, yx^{-1}, y^2x^{-2}, y^3x^{-3}, \ldots$

so

$$\mathrm{Dhom}(k_q[x,y], x) \cong k[yx^{-1}]$$

a polynomial algebra in one variable.

Quantum matrices

$0 \neq q \in k$

- $O_q(M_2(k)) = k\begin{bmatrix} a & b \\ c & d \end{bmatrix}$

$ab = qba \quad ac = qca$

$bd = qdb \quad cd = qdc$

$bc = cb \quad ad - da = (q - q^{-1})bc$

- $D_q = ad - qbc$ the <u>quantum determinant</u> is a central element

- $O_q(M_{2,4}(k)) = k\begin{bmatrix} x_{11} & x_{12} & x_{13} & x_{14} \\ x_{21} & x_{22} & x_{23} & x_{24} \end{bmatrix}$

<u>commutation rules</u> any 2×2 submatrix is $O_q(M_2(k))$.

Quantum Grassmannians

- <u>commutative case</u> over a field k ; $V = k^4$

  $G(2,4)$ is the set of 2-dimensional subspaces of $V = k^4$

  $G(2,4)$ is a projective variety.

- $0 \neq q \in k$ $\quad C_q(2,4)$ is the subalgebra of $O_q(M(2,4))$ generated by the quantum determinants of the 2×2 submatrices.

- A 2×2 submatrix is specified by choosing columns $i < j$ We denote by $[ij]$

$G_q(2,4)$

- $O_q(M(2,4)) = k\begin{bmatrix} x_{11} & x_{12} & x_{13} & x_{14} \\ x_{21} & x_{22} & x_{23} & x_{24} \end{bmatrix}$

- There are six 2x2 quantum minors

  $[12], [13], [14], [23], [24], [34]$

- $G_q(2,4) := k[[12],[13],[14],[23],[24],[34]]$

  $$[12][34] - q[13][24] + q^2[14][23] = 0$$

- $u := [34]$ is <u>normal</u> in $R = G_q(2,4)$
  <u>ie</u> $uR = Ru$

  <u>eg</u> $[13][34] = q[34][13]$, $[12][34] = q^2[34][12]$

$Dhom(G_q(2,4), [34])$

- $Dhom(G_q(2,4), [34]) \cong O_q(M_2)$

- eg Kelly uses this to describe completely the graded prime spectrum of $G_q(2,4)$

$G_q(2,4)$ is a maximal order

- $R = G_q(2,4) \qquad u = [34]$
- $R[u^{-1}] \cong \mathrm{Dhom}(R, u)[z, z^{-1}; \sigma]$
  $\cong O_q(M_2)[z, z^{-1}; \sigma]$
- $O_q(M_2)$ is a maximal order
  $\therefore$ $R[u^{-1}]$ is a maximal order
- $V := [12]$. similarly $R[v^{-1}]$ is a maximal order
- $R = R[u^{-1}] \cap R[v^{-1}]$
- $\therefore$ $R = G_q(2,4)$ is a maximal order